ECN NO	REVISION	DATE	BY	DESCRIPTION
81175	B	11/1/94	BK	ADDED ITEMS 28 & 30
81193	C	2/13/95	BK	REMOVED ITEM #15 (4) 10-4106 BRG
81223	D	5/2/95	KM	CHANGED ITEM #7 FROM 0604110 TO 0604113, ITEM #18 FROM 2013316 TO 2010263, DELETE 0624107 & 0624104.
81345	E	2/15/96	TB	CHANGED ITEM #5 TO 8070000 IDLER ROLL DELETE ITEM #16 (4) 0104092
81345	E1	3/21/96	TB	CHANGED 8070000 QTY FROM (1) TO (4)

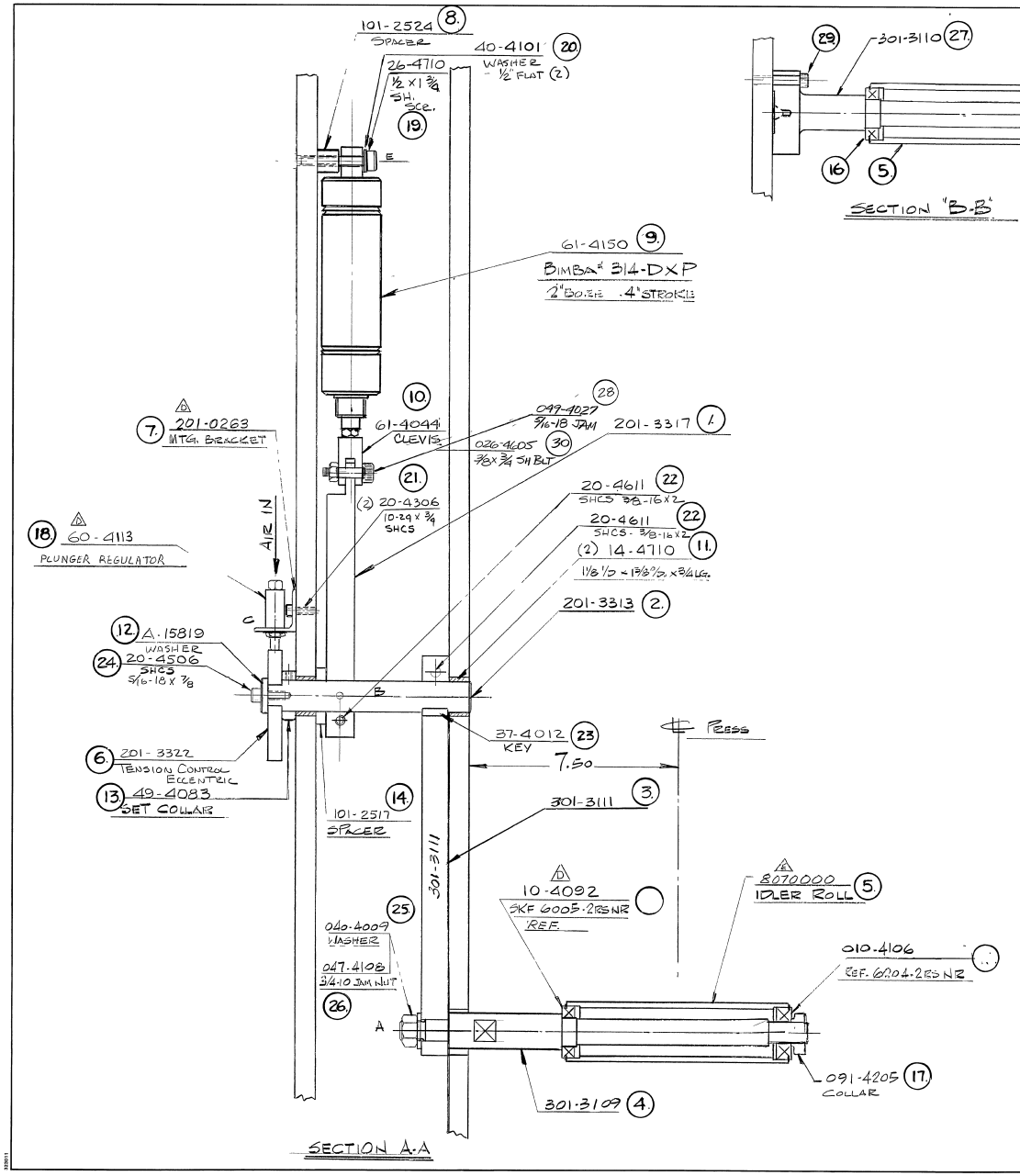

SECTION A-A

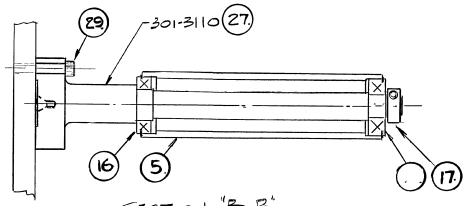

SECTION "B-B"

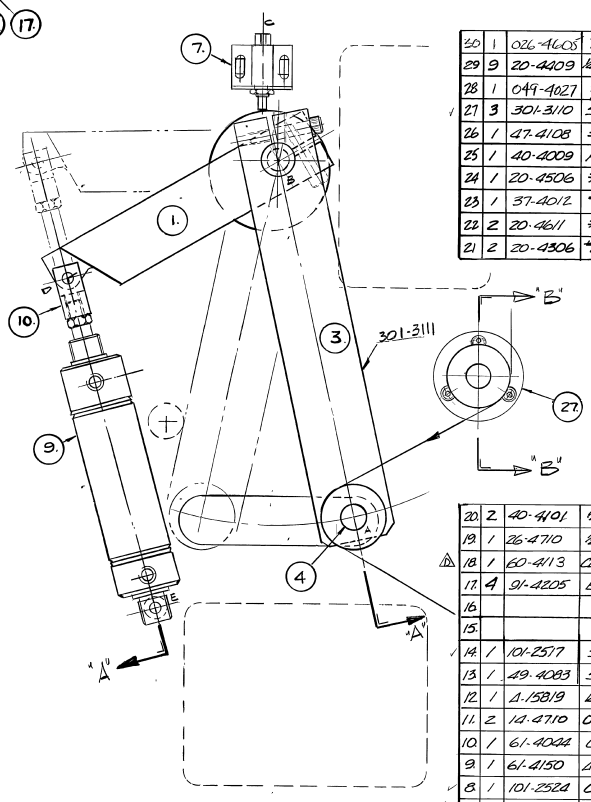

30	1	026-4605	3/8 x 3/4 SHOULDER BOLT
29	9	20-4209	1/4-20 x 1 1/2" SHCS.
28	1	049-4027	5/16-18 JAM NUT
27	3	301-3110	STATIONARY IDLER SHAFT
26	1	47-4108	3/4-10 JAM NUT
25	1	40-4009	FLAT WASH.
24	1	20-4506	5/16-18 x 7/8" SHCS
23	1	37-4012	#807 WOODRUFF KEY
22	2	20-4611	3/8-16 x 2" SHCS
21	2	20-4306	#10-24 x 3/4" SHCS

20.	2	40-4101	1/2" FLAT WASHER
19.	1	26-4710	1/2 x 1 3/4" SH SHOULDER SCR.
(A) 18.	1	60-4113	CLIPPARD AIR REG., #MAR-1C
17.	4	91-4205	BRG. RETAINING COLLAR
16			
15.			
14.	1	101-2517	SPACER, 1/2"
13.	1	49-4083	SHAFT CLAMP COLLAR, 1/8"
12.	1	A-15819	RETAINING WASHER
11.	2	14-4710	OILITE BUSH, AA1332-1
10.	1	61-4044	CLEVIS
9.	1	61-4150	AIR CYL, BIMBA #314-DXP
8.	1	101-2524	CYL MTG. SPACER
(A) 7.	1	201-0263	MTG. BRKT.
6.	1	201-3322	TENSION CONTROL ECCENTRIC
(E) 5.	4	8070000	IDLER ROLL
4.	1	301-3109	SWING ARM IDLER SHAFT
3.	1	301-3111	DANCER ARM
2.	1	201-3313	DANCER SHAFT
1.	1	201-3317	SWING ARM LEVER

NOTE: TWO FIXED IDLER ASSY'S NOT SHOWN - (TYP 6-8)

GEOMETRIC SYMBOLS	
SYMBOL	CHARACTERISTIC
▱	FLATNESS
—	STRAIGHTNESS
⌖	ALIGNMENT
//	PARALLELISM
⊥	SQUARENESS
↗	RUNOUT
∠	ANGULARITY
○	ROUNDNESS
⌭	CYLINDRICITY
◎	CONCENTRICITY
⌯	ECCENTRICITY
⌯	SYMMETRY

MATERIAL

FINISH

STD DIM TOL

XX	±	02
XXX	±	005
ANGLE	±	0°30

PART TO BE FREE OF BURRS SHARP EDGES AND SHARP CORNERS

DO NOT SCALE PRINT

ITEM	QTY	PART No	DESCRIPTION

DRAWN BY C.V. Zang DATE 1-14-92

CHK'D BY DATE

APPR BY DATE

SCALE HALF

Wabtron
A DIDDE CORPORATION

DANCER ROLL ASS'Y

MOD. 750 UNWIND

THIS PRINT IS THE PROPERTY OF WEBTRON CORP. AND IS FURNISHED FOR ENGINEERING INFORMATION & REFERENCE ONLY. WEBTRON RESERVES ALL PATENT, PROPRIETARY, DESIGN, USE, SALE, MANUFACTURE AND REPRODUCTION RIGHTS THERETO

PRESS 750 | ASSY | SUB ASSY

DRAWING No 401-3123 REV E1