ECN	REV	DATE	I D	DESCRIPTION
81573	M	6-2-98	TDB	DELETE: 075-4035, ADD (1) 075-4023
81677	N	7-12-99	TDB	CHANGE ITEM 47 FROM 21-4101 TO 22-4507

ECN NO.	REV.	DATE	BY	DESCRIPTION
8835	I	10-11-11		5 (3) 22-4001
10157	J	11-26-91	SK	ITEM # 52 WAS B-6254 QTY. (1)
80454	K	9-24-93	RC	ITEM 39 WAS 13-4013
81[illegible]	L	[illegible]	MK	ADDED ITEM 47

ECN NO.	REV.	DATE	BY	DESCRIPTION
8174	G	3-28-90	AH	REMOVED FROM NOTE 1: "USE SECOND ITEM 54 TO LOCK IN PLACE"; ITEM 22 (1) 101-0970 LOCK SCREW MODIFIED WAS (1) 26-4004 LOCK SCREW ACME #2; ITEM 52 B-6254 WAS A-6254; ITEM 54 (2) 29-4139 5/16-18 x 1/2 NYLOK SHSS WAS (4) 22-4518 SET SCREW 5/16-18 x 5/8 LG.
8479	H	6-29-90	AH	ITEM 40 (6) 13-4002 TORRINGTON TRB 613 WASHER WAS (4)

ECN #	REV	DATE	BY	DESCRIPTION
2375	A	5-30-85	J.W.	A. WAS 5" REF., A1 WAS B-6205 REF.,
				A5 WAS A-6254 REF.
2498	B	[illegible]	W.K.	CHANGE KNOB DESIGN
3465	C	9/19/86	J.R.	101-0286 WAS 90-4051
5333	D	7/28/88	A.H.	ADDED ITEM 46 TO TABLE
7518	E	11/6/89	AH	ADDED: NOTE 1 & SEE NOTE 1 TO ITEM 54
7888	F	1/29/90	AH	ADDED NOTES: SHIM HERE ONLY AS REQ'D & DO NOT SHIM HERE

REV G CONTINUED IN NEXT COLUMN

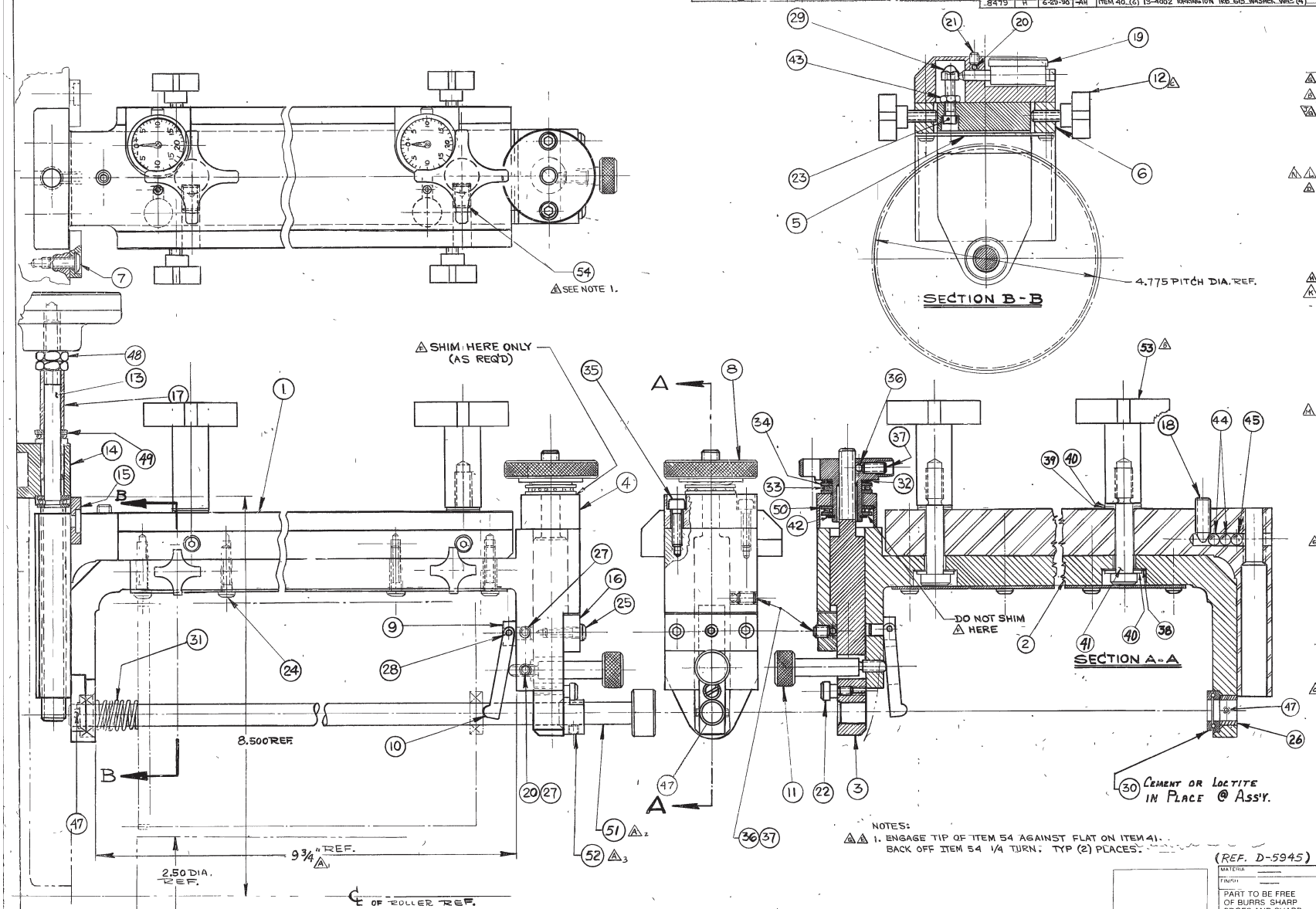

ITEM	QTY	PART No.	DESCRIPTION
54	2	29-4139	5/16-18 x 1/2 NYLOCK SHSS
53	2	201-0277	TEE HANDLE KNOB
52	1	201-2824	RETAINER, SHAFT, SHAKE PROOF
51	1	201-0267	PLATE ROLL SHAFT
50	1	13-4027	SPACER WASHER #TRA-1018
49	2	12-4001	BEARING
48	2	47-4103	3/8-16 JAM NUT
47	2	22-4507	#6-32 x 1/8" LG S.S.S. FLAT PT.
46	1	14-4223	SPACER-BRONZE, OILITE P/N AA-6277
45	1	99-4144	1/4 DIA. NYLON BALL
44	2	99-4145	1/4 DIA. STEEL BALL
43	2	47-4509	#10-24 HEX NUT
42	1	44-4022	RET. RING .625 DIA. .035 THK.
41	2	101-0156	ADJ. BRIDGE SCREW
40	6	13-4002	TORRINGTON TRB 613 WASHER
39	2	13-4025	THR. WASHER TORR. # TRA-613
38	2	13-4003	THR. WASHER TORR. # TRA-815
37	3	22-4467	1/4-28 x 5/16 LG. S.H.S.S.
36	3	99-4063	3/16 DIA. NYLON BALL
35	2	20-4306	#10-24 x 7/8 LG. S.H.C.S.
34	3	13-4008	THR. WASHER TORR. # TRB-1018
33	2	13-4010	ROLLER ASS'Y. TORR. # NTA-1018
32	1	75-4027	BELLEVILLE SPR. WASHER
31	1	075-4023	COMPR. SPRING
30	1	12-4002	THRUST BRG. NICE # 602 3/4
29	2	49-4082	#10-24 ACORN NUT
28	1	30-4005	1/8 DIA. x 7/8 LG. DOWEL PIN
27	2	22-4910	#10-32 x 1/4 LG. S.H.S.S.
26	1	91-4101	ASA # P-40-6 DRILL BUSHING
25	2	21-4305	#10-24 x 3/4 LG. B.H.S.C.S.
24	8	21-4307	#10-24 x 1" LG. B.H.S.C.S.
23	2	20-4307	#10-24 x 1" LG. S.H.C.S.
22	1	101-0970	LOCK SCREW - MODIFIED
21	2	22-4056	#10-24 x 1/4 LG. S.H.S.S.
20	3	99-4062	NYLON BALL 1/8 DIA.
19	2	99-4108	STARRETT DIAL IND. # 80-144 FLAT BACK
18	1	A-6366	PUSH - SCREW
17	1	A-6323	BEARING CLAMP TUBE
16	1	A-9323	FRONT PLATE
15	2	101-0174	HOLD DOWN BLOCK RETAINER
14	1	201-0261	PLATE ROLL HOLD DWN BL'K ASS'Y
13	1	B-9329	VERT. ADJ. SCREW
12	4	101-0286	ADJ. BRIDGE SCREW ASS'Y.
11	1	A-6218	PLATE ROLL LAT. ADJ. SCREW
10	1	A-1215	ADJ. LEVER
9	1	A-6293	HINGE
8	1	A-9331	REG. ADJUSTING KNOB
7	2	21-4403	1/4-20 x 1/2 LG. B.H.S.C.S.
6	2	201-0260	ADJ. BRIDGE RAIL
5	1	201-0259	ADJ. BRIDGE COVER
4	1	A-9312	THRUST PLATE
3	1	B-7568	PLATE ROLL LATERAL ADJ. SCREW
2	1	401-0090	ADJUSTABLE BRIDGE CASTING
1	1	401-0091	ADJUSTABLE BRIDGE SUPPORT

NOTES:
1. ENGAGE TIP OF ITEM 54 AGAINST FLAT ON ITEM 41. BACK OFF ITEM 54 1/4 TURN. TYP (2) PLACES.

(REF. D-5945)

MATERIAL —
FINISH —
PART TO BE FREE OF BURRS SHARP EDGES AND SHARP CORNERS
UNLESS OTHERWISE SPECIFIED ALL MACHINE SURFACES TO BE ✓
DO NOT SCALE PRINT

J.W. 6-3-85

GBC Webtron Presses

ASS'Y, BRIDGE, ADJUSTABLE (15" MAX. REPEAT)

SCALE: FULL

THIS DWG IS THE PROPERTY OF GENERAL BINDING CORP. AND IS LOANED FOR ENGINEERING REFERENCE ONLY. GB RESERVES ALL PATENT, PROPRIETARY DESIGN, USE, SALE, MANUFACTURE AND REPRODUCTION RIGHTS THERETO

STD DIM TOL — DEC ± .005 FRAC ± 1/64 ANGLE ± 0°30'

NEXT ASSEMBLY —

DRAWING NO. 401-0093 F