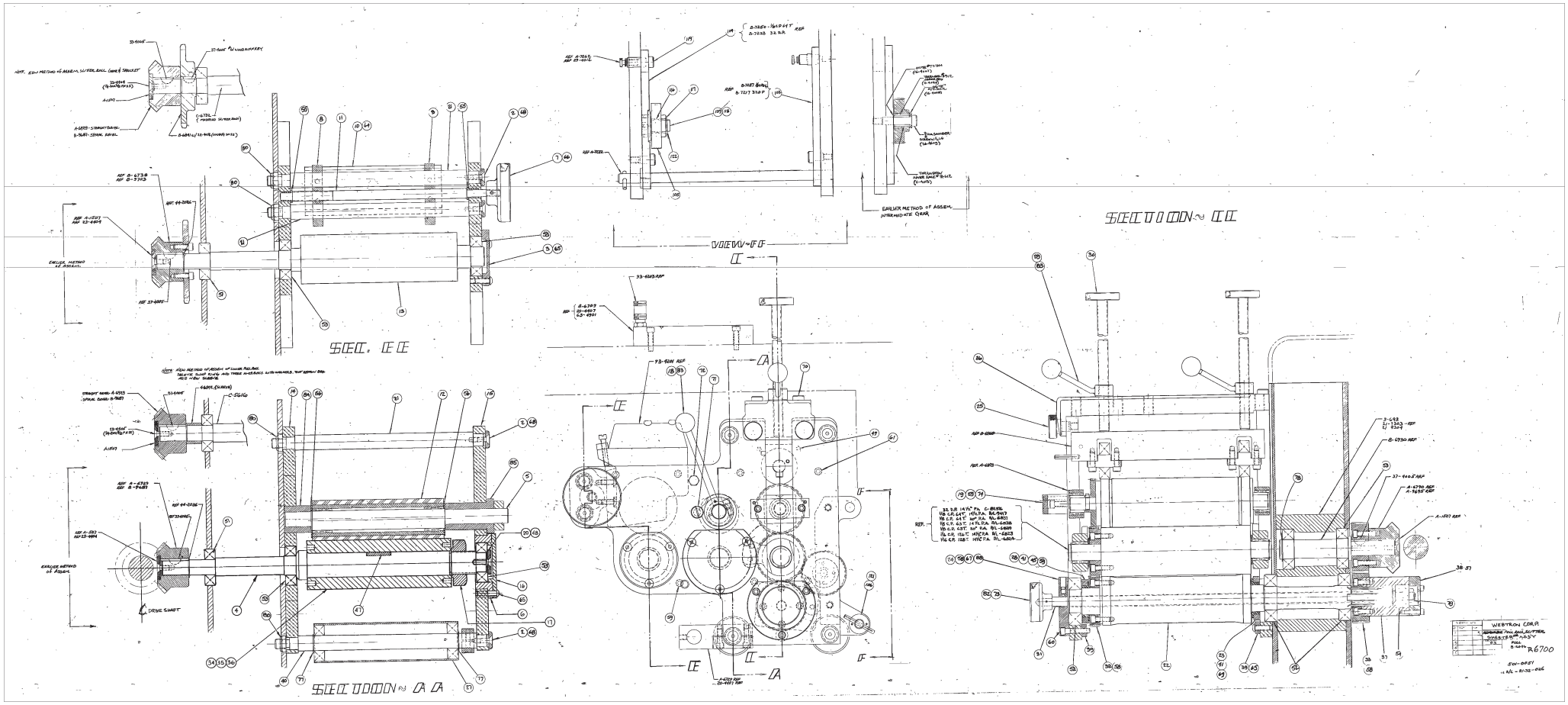
SEC. EE
SECTION ~ AA
VIEW ~ FF
SECTION ~ CC
EARLIER METHOD OF ASSEM.
INTERMEDIATE GEAR
DRIVE SHAFT
WEBTRON CORP.
R6700