ECN NO.	REV	DATE	BY	DESCRIPTION
7004	C	6/9/89	AH	DWG. UPDATED TO MATCH MRP II BOM CLEANUP PROGRAM
9159	E	1/24/91	EB	93-4271 WAS 93-4001 ; 93-4272 WAS 93-4007
9364	F	4/3/91	SK	93-4001 WAS 93-4271, 93-4007 WAS 93-4272

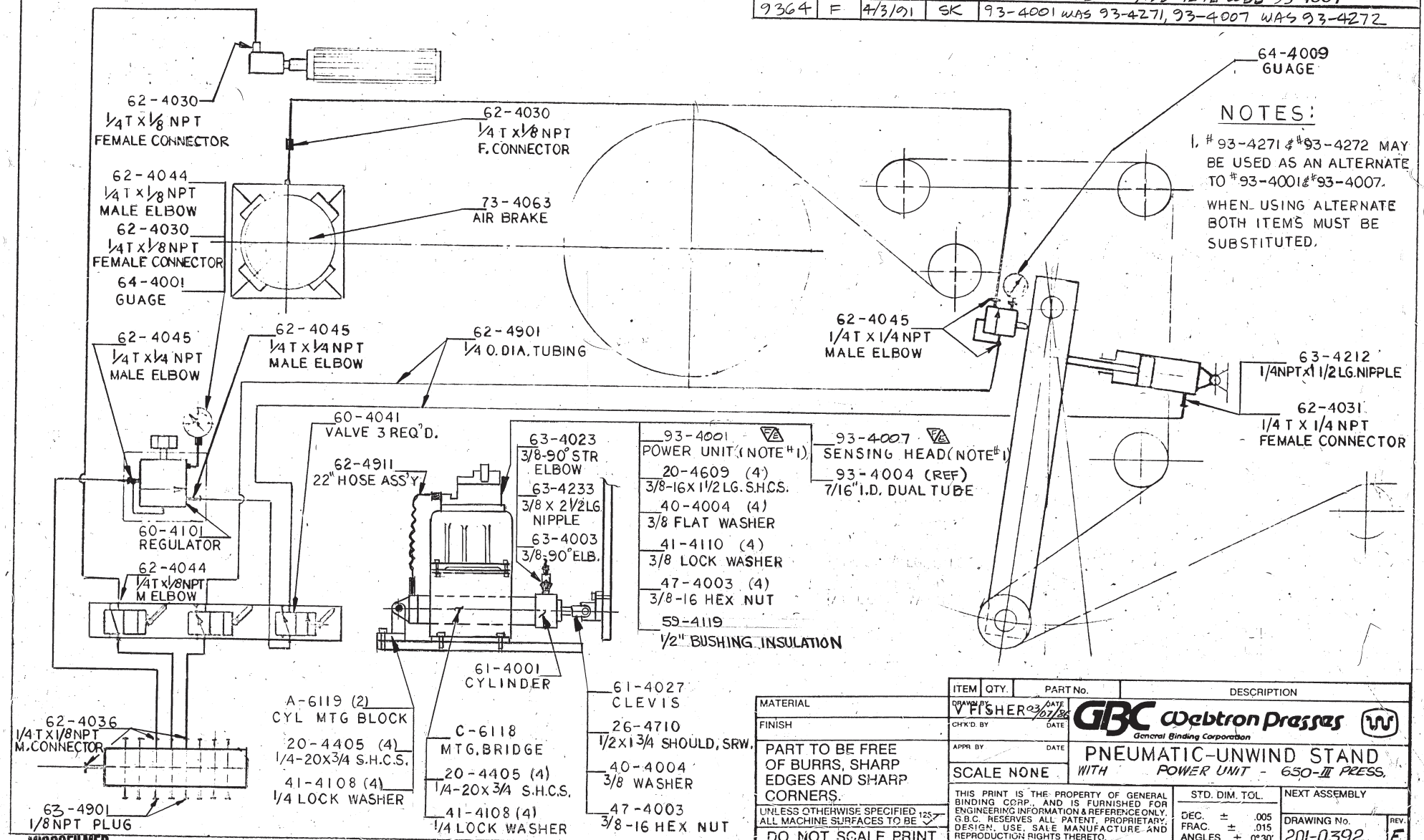

NOTES:

1. #93-4271 & #93-4272 MAY BE USED AS AN ALTERNATE TO #93-4001 & #93-4007.

WHEN USING ALTERNATE BOTH ITEMS MUST BE SUBSTITUTED.

ITEM	QTY.	PART No.	DESCRIPTION

MATERIAL

FINISH

PART TO BE FREE OF BURRS, SHARP EDGES AND SHARP CORNERS.

UNLESS OTHERWISE SPECIFIED ALL MACHINE SURFACES TO BE 125

DO NOT SCALE PRINT

DRAWN BY V FISHER DATE 03/07/86

CH'K'D. BY DATE

APPR BY DATE

SCALE NONE

GBC Webtron Presses
General Binding Corporation

PNEUMATIC-UNWIND STAND WITH POWER UNIT - 650-III PRESS.

THIS PRINT IS THE PROPERTY OF GENERAL BINDING CORP., AND IS FURNISHED FOR ENGINEERING INFORMATION & REFERENCE ONLY. G.B.C. RESERVES ALL PATENT, PROPRIETARY, DESIGN, USE, SALE MANUFACTURE AND REPRODUCTION RIGHTS THERETO.

STD. DIM. TOL.
DEC. ± .005
FRAC. ± .015
ANGLES ± 0°30'

NEXT ASSEMBLY

DRAWING No. 201-0392

REV. F

MICROFILMED