ECN #	REV	DATE	BY	DESCRIPTION
10285	A	10/20/91	SK	ADDED #95, #33 QTY WAS 10, #60 WAS 2 ECN #4494
10340	B	12/6/91	SK	ADDED #36, 37, 38, 39 WAS #82-4210, #20 WAS 2, #4427 #71 WAS 21-4507 #65 WAS 21-4001
#41 WAS 20-4407				
10678	C	11/13/92	SK	ADDED NOTE
10699	D	4/19/93	RC	ITEM 81 WAS 30-4048; QTY IT. 80 WAS 4; QTY IT. 31 WAS 8

402-2692 ASSY '16/8' — 401-2692 ASSY '1000'

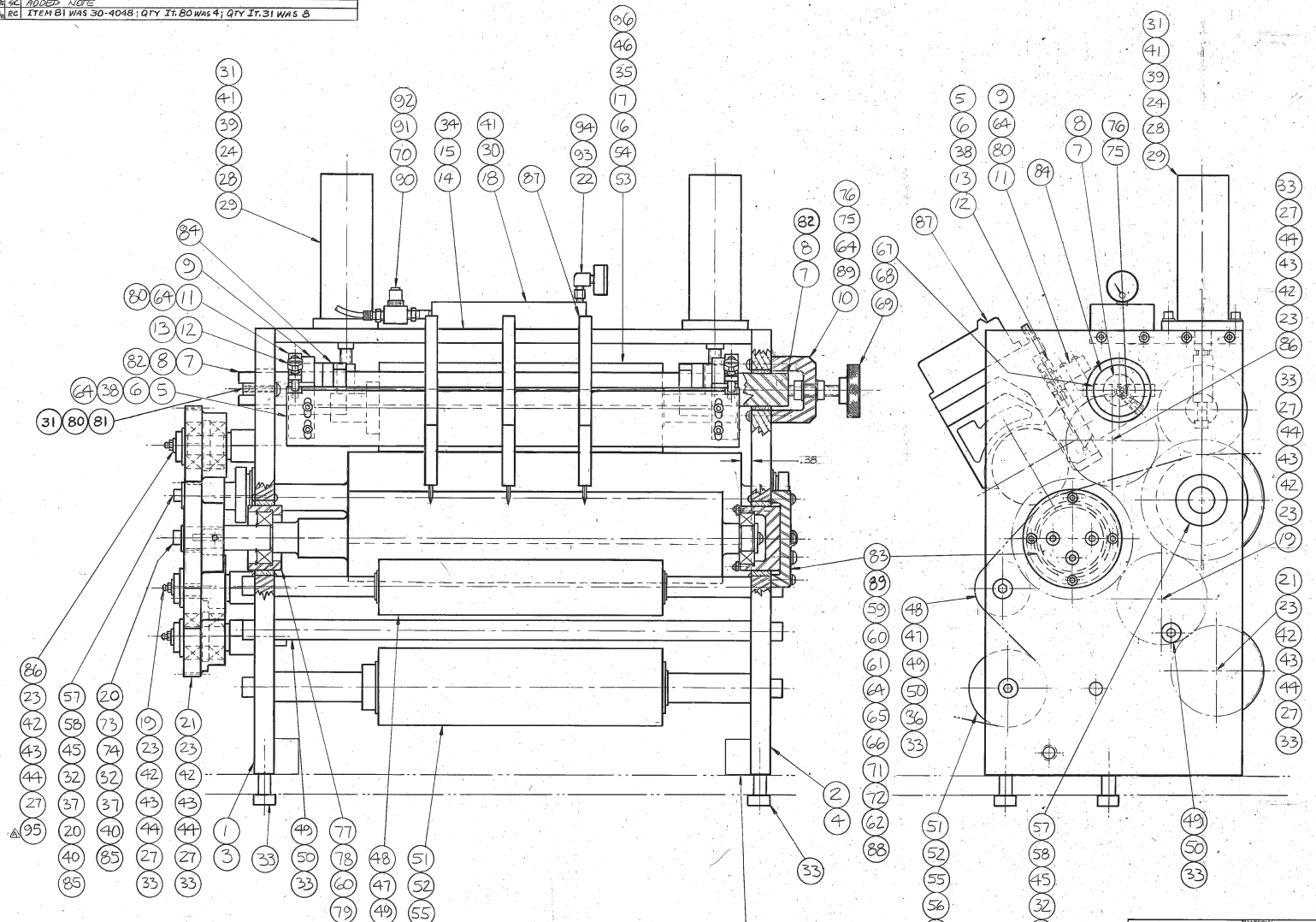

QTY.	ITEM	QTY.	PART No.	DESCRIPTION
	93			
3	93	3	62-4186	ADAPTER
	92		401-2692	ASSY ROTOR
2	92	2	10-4097	BEARING
	95	1	26-4705	1/2" DIA X 3/4" LG. SHOULDER SCREW
1	94	1	62-4117	ELBOW 1/8" NPT
1	93	1	62-4137	ADAPTER 1/8" NPT
2	92	2	62-4121	BUSHING 1/4" NPT TO 1/8" NPT
	91	1	62-4036	COUPLING 1/8 PIPE TO 1/4 HOSE
1	90	1	60-4105	REGULATOR
8	89	8	21-4407	1/4-20 X 1" LG. B.H.S.C.S.
1	88	1	201-2754	CAP SCORE CUT
3	87	3	93-4319	SCORECUT CUTTER ASSY (USA)
	86	1	201-0905	IDLER GEAR
8	85	8	40-4506	3/8" RATCHET WASHER
2	84	2	71-4516	TRANS TORQUE BUSHING
2	83	2	101-0520	BUSHING
2	82	2	14-4780	BUSHING
1	81	1	101-2212	LOCK-SHAFT ROTATION
6	80	6	21-4408	1/4-20 X 1 1/4" LG. B.H.S.C.S.
1	79	1	44-4031	RET. RING, EXT.
1	78	1	44-4242	RET. RING, INT.
1	77	1	101-0928	SLEEVE, BEARING
1	76	1	22-4058	#10-24 SET SCREW
1	75	1	99-4062	NYLON BALL
1	74		402-2691	ANVIL ROLL
	73	1	401-2691	ANVIL ROLL
6	72	6	40-4505	5/16" RATCHET WASHER
3	71	3	21-4506	5/16-18 X 1 1/8" LG. B.H.S.C.S.
1	70	1	62-4331	NIPPLE
1	69	1	202-2494	KNOB ASSY
2	68	2	16-4006	THRUST WASHER
2	67	2	91-4136	COLLAR, THREADED
4	66	4	41-4103	#4 LOCK WASHER
4	65	4	21-4002	#4-40 X 3/8" LG. B.H.S.C.S.
18	64	18	40-4504	1/4" RATCHET WASHER
13	63	13	21-4602	1/4-20 X 3/16" LG. B.H.S.C.S.
1	62	1	A-13528	WASHER
1	61	1	101-2089	RETAINER
2	60	2	10-4083	BEARING
1	59	1	201-2498	CAP, BEARING
1	58		402-2332	PULL ROLL
	57	1	401-2332	PULL ROLL
1	56		316-0428	SHAFT
	55	1	315-0428	SHAFT
1	54		304-0406	NIP ROLL
	53	1	302-0406	NIP ROLL
	52	1	301-0502	3" IDLER ROLL ASSY
1	51		303-0631	4" IDLER ROLL ASSY
2	50		206-0692	SHAFT
	49	2	204-0692	SHAFT
	48		301-0494	IDLER ROLL 2 1/8" DIA.
1	47		302-0494	IDLER ROLL 2 1/8" DIA.
2	46	2	91-4138	COLLAR
2	45	2	10-4193	BEARING
2	44	1	11-4130	BEARING ASSY
2	43	1	19-4065	LOCK NUT
2	42	1	19-4066	LOCK WASHER
10	41	10	20-4408	1/4-20 X 1 1/4" LG. S.H.C.S.
2	40	2	20-4605	3/8-16 X 3/4" LG. S.H.C.S.
2	39	2	20-4608	3/8-16 X 1 1/4" LG. S.H.C.S.
4	38	4	21-4405	1/4-20 X 3/4" LG. B.H.S.C.S.
4	37	4	22-4523	#10-24 X 1/2" LG. SET SCREW
2	36	2	44-4027	SNAP RING, EXT. (SMALL)
2	35	2	44-4036	SNAP RING, EXT. (LARGE)
8	34	8	26-4405	1/4" DIA. X 3/4" LG. SHOULDER SCREW
12	33	10	26-4707	1/2" DIA. X 1" LG. SHOULDER SCREW
2	32	2	38-4103	3/16" SQ. KEY X 3/8" LG.
10	31	10	41-4108	1/2" LOCK WASHER
13	30	13	63-4901	PIPE PLUG
2	29	2	61-4095	AIR CYLINDER
2	28	2	61-4108	MOUNTING KIT
2	27	1	93-4105	GREASE FITTING
1	26	1	99-4411	LABEL - NIP
1	25	1	99-4304	LABEL - KNIFE
2	24	2	102-0555	COUPLER
2	23	1	203-0496	IDLER STUD
1	22	1	64-4002	GAGE
1	21		201-2367	IDLER GEAR
2	20	2	201-0907	GEAR
1	19		201-0905	IDLER GEAR
1	18	1	A-6709	MANIFOLD
1	17		202-0908	NIP ROLL SHAFT
	16	1	201-0906	NIP ROLL SHAFT
1	15		304-0757	TOP PLATE
	14	1	303-0757	TOP PLATE
2	13	2	44-4007	RET. RING, EXT.
2	12	2	101-2124	ADJUSTER
2	11	2	201-2748	BRACKET, ADJUSTER
1	10	1	201-2750	CAP, LAT. ADJ.
2	9	2	201-2749	PIVOT
1	8		201-2792	SHAFT, DOVETAIL MTG.
	7	1	201-2792	SHAFT, DOVETAIL MTG.
1	6		202-2753	DOVETAIL, ADJUSTABLE
	5	1	201-2753	DOVETAIL, ADJUSTABLE
1	4		402-2682	SIDE FRAME, OUTBOARD
1	3		401-2682	SIDE FRAME, INBOARD
	2	1	402-2683	SIDE FRAME, OUTBOARD
	1	1	401-2683	SIDE FRAME, INBOARD

△ NOTE: ADJUST DOVETAIL ANGLE USING ITEM #84. ED ALL KNIVES CUT EQUALLY AT SUB-ASSEMBLY.

GEOMETRIC SYMBOLS	
SYMBOL	CHARACTERISTIC
▱	FLATNESS
—	STRAIGHTNESS
⟂	ALIGNMENT
//	PARALLELISM
⊥	SQUARENESS
↗	RUNOUT
∠	ANGULARITY
○	ROUNDNESS
⌭	CYLINDRICITY
◎	CONCENTRICITY
⌰	ECCENTRICITY
⌯	SYMMETRY

MATERIAL

FINISH

STD DIM TOL

XX	±	.02
XXX	±	.005
ANGLE	±	0°30'

PART TO BE FREE OF BURRS, SHARP EDGES AND SHARP CORNERS.

DO NOT SCALE PRINT

DRAWN BY SK DATE 6/17/91

CHK'D BY DATE

APPR. BY DATE

SCALE HALF

Westron A DIDDE CORPORATION

SCORECUT W/P. ROLL ASSY (USA SCORE CUTTER - REF.)

THIS PRINT IS THE PROPERTY OF WESTRON CORP. AND IS FURNISHED FOR ENGINEERING INFORMATION & REFERENCE ONLY. WESTRON RESERVES ALL PATENT, PROPRIETARY, DESIGN, USE, SALE, MANUFACTURE AND REPRODUCTION RIGHTS THERETO.

PRESS 1000/1618 | ASSY | SUB ASSY

DRAWING No. 400-2692 REV. D