ECN NO.	ENG.	DATE	BY	DESCRIPTION
6113	A	12/6/88	AM	401-2326 DRYER HSG. ASS'Y WAS 501-0057 DRYER HSG. 401-2333 DIST. PLATE - DRYER WAS 401-0811 AIR DIST. PLATE, 401-2337 CONVEY ASSY-DRYER WAS 401-0560 AIR DIST. COVER
6256	B	1/30/89	AM	401-2321 WAS 401-2318, 401-2314 & 401-2317 COMBINED
6482	C	9/16/89	GCC	ADD 59-6256, 59-4041, 59-4024, 59-4199, 59-4484, 59-4485
7056	D	7/12/89	AM	BMG UPDATE TO MARCH 1989 B.O.M. CLEAN-UP PROGRAM
8331	E	5/1/92	SK	401-2507 WAS 401-2506
8475	F	11/24/92	SHS	ADD 49-4266 (MAG. STRIP), 25-4404 (SCR. HHCS 8)
9246	G	2/20/95	SK	49-4266 WAS 49-4072

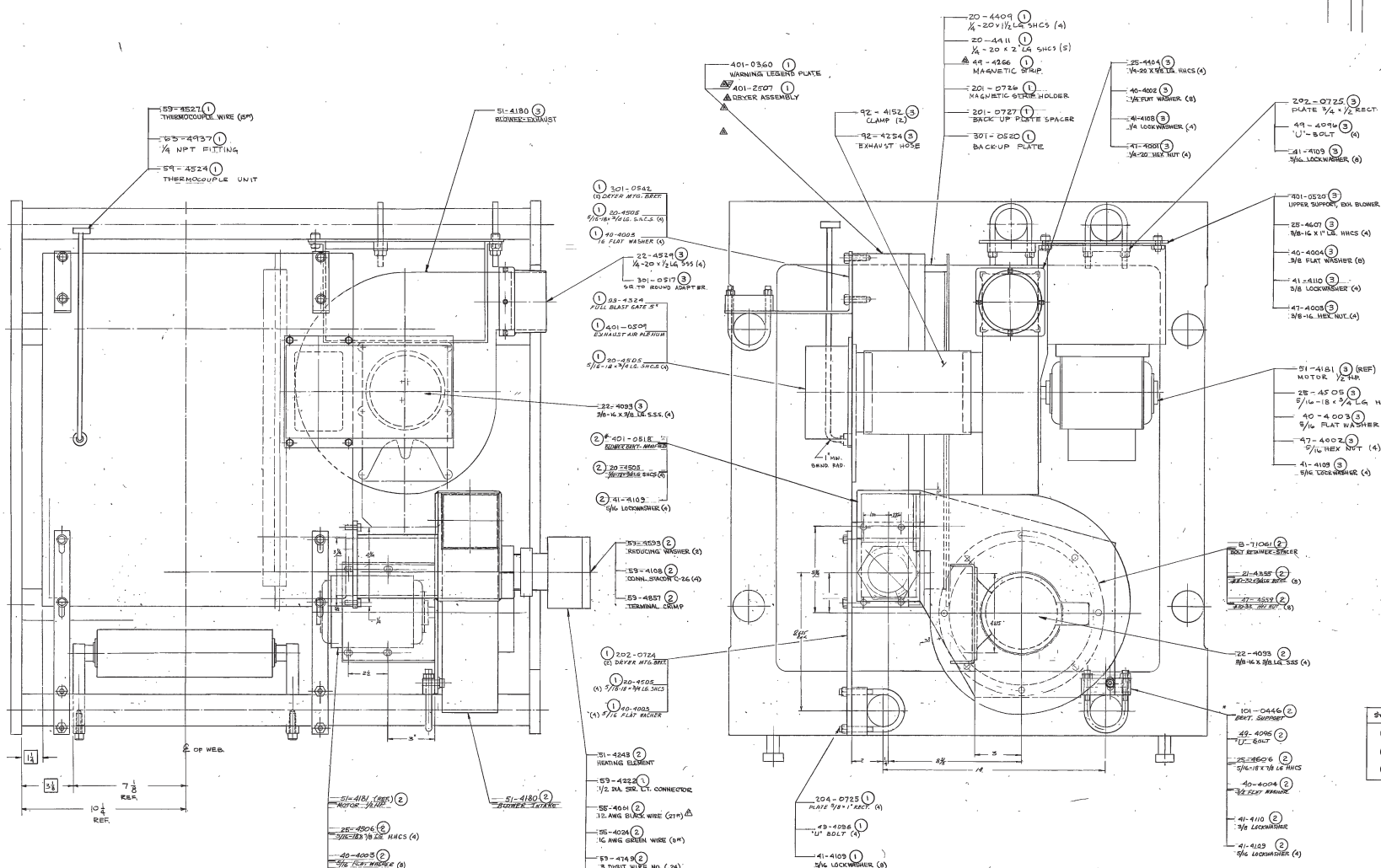

SYMBOL	BILL OF MAT'L
1	501-0062
2	502-0062
3	508-0062

FOR 1618 PRESS SEE DWG. 500-0135

ITEM	QTY.	PART NO.	DESCRIPTION

MATERIAL

FINISH

PART TO BE FREE OF BURRS, SHARP EDGES AND SHARP CORNERS.
UNLESS OTHERWISE SPECIFIED DIMENSIONS ARE FINISHED.
DO NOT SCALE PRINT

GBC CDeltron Dressel Wood Finishing Manufacturer

NOT AIR DRYER SYSTEM ASSY.
FLEXO PRINT UNIT

SCALE

STD. DIM. TOL.

NEXT ASSEMBLY

DRAWN BY

DATE

DWG. NO. 500-0062 G

SHEET 1 OF 1

THIS DWG. IS THE PROPERTY OF GENERAL BINDING CORP., AND IS LOANED FOR USE ONLY WITH THE UNDERSTANDING THAT IT WILL BE RETURNED ON DEMAND. THIS DWG. MUST NOT BE REPRODUCED, COPIED OR DISCLOSED TO OTHERS WITHOUT WRITTEN PERMISSION AND AUTHORIZATION FROM GENERAL BINDING CORP.